1 : 10

IT.TECH
IT.TECH

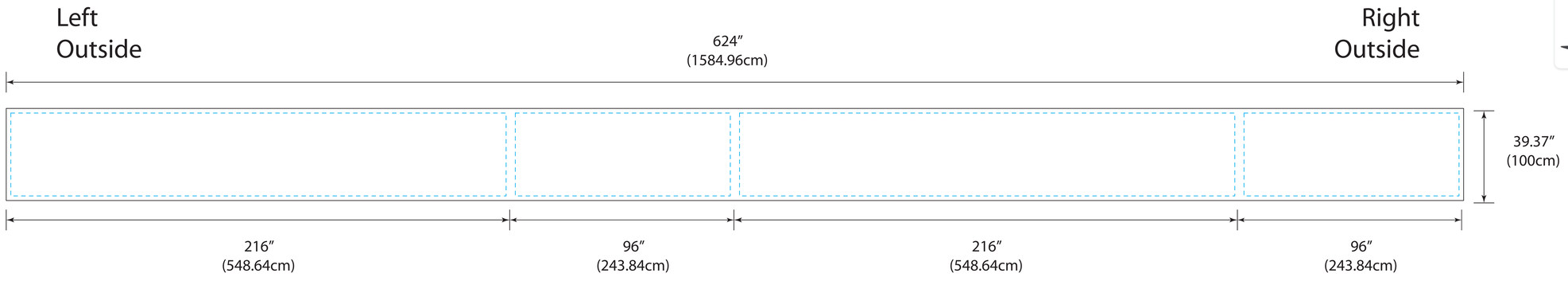
Left
Outside
624″
(1584.96cm)
Right
Outside
39.37″
(100cm)
216″
(548.64cm)
96″
(243.84cm)
216″
(548.64cm)
96″
(243.84cm)

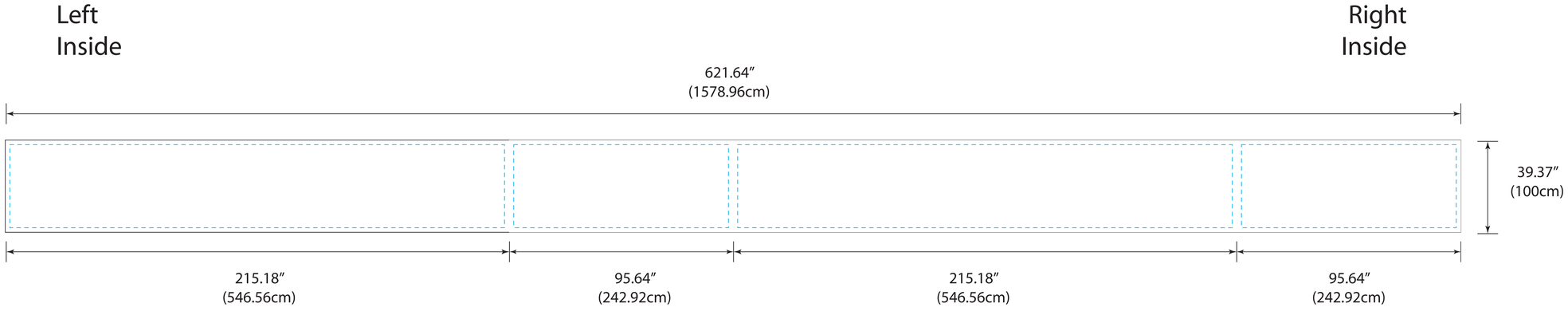
Left
Inside
621.64″
(1578.96cm)
Right
Inside
39.37″
(100cm)
215.18″
(546.56cm)
95.64″
(242.92cm)
215.18″
(546.56cm)
95.64″
(242.92cm)

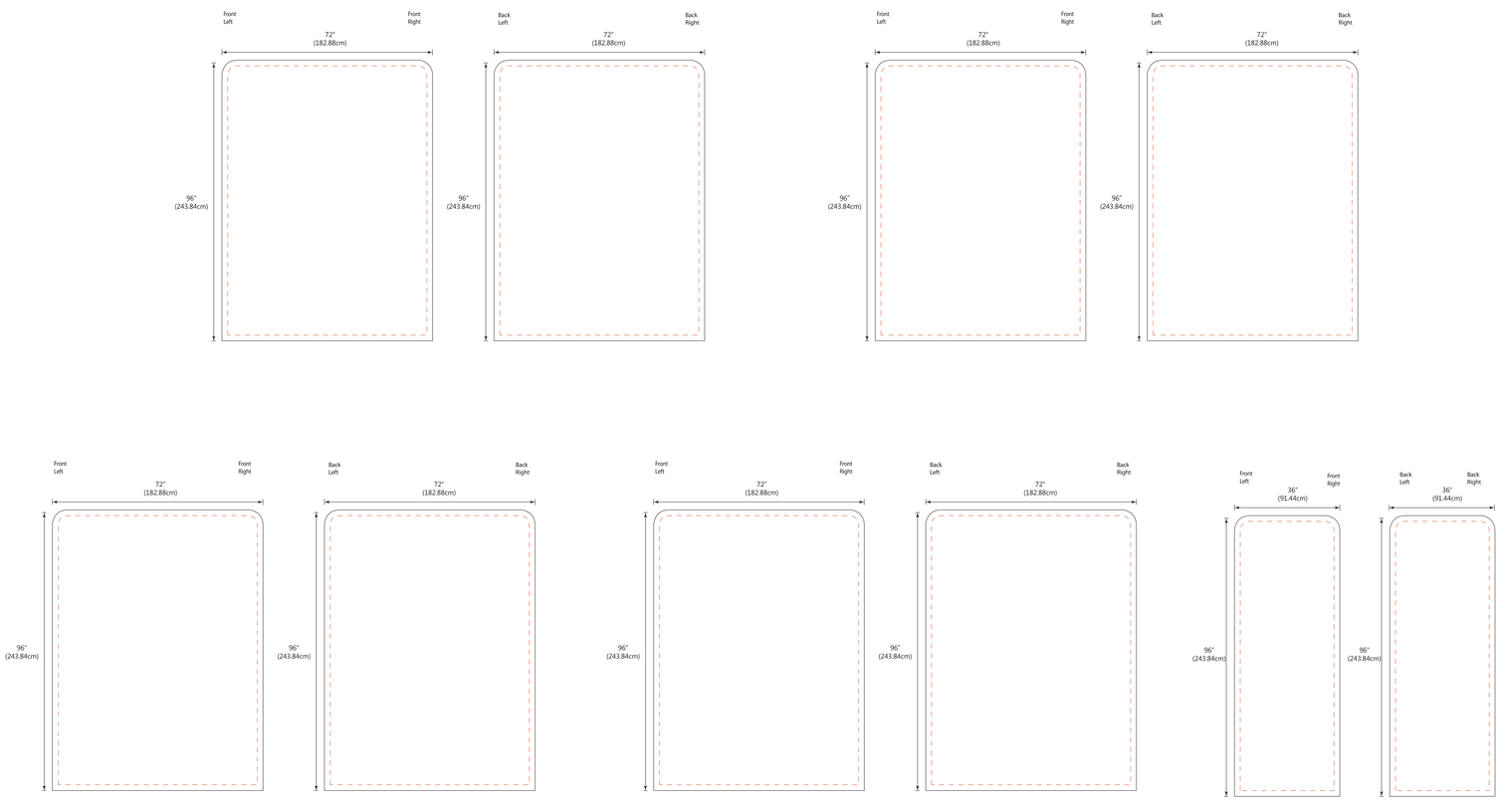
Front Left
Front Right
Back Left
Back Right
72″
(182.88cm)
96″
(243.84cm)
36″
(91.44cm)

1:10

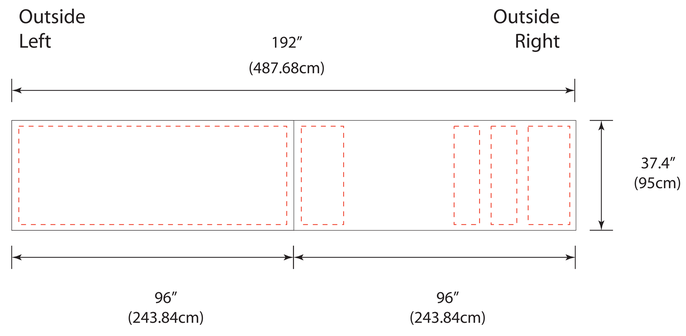
Outside
Left
192″
(487.68cm)
Outside
Right
37.4″
(95cm)
96″
(243.84cm)
96″
(243.84cm)

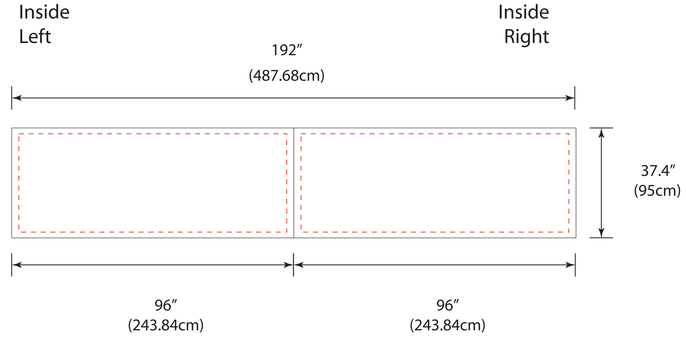
Inside
Left
192″
(487.68cm)
Inside
Right
37.4″
(95cm)
96″
(243.84cm)
96″
(243.84cm)